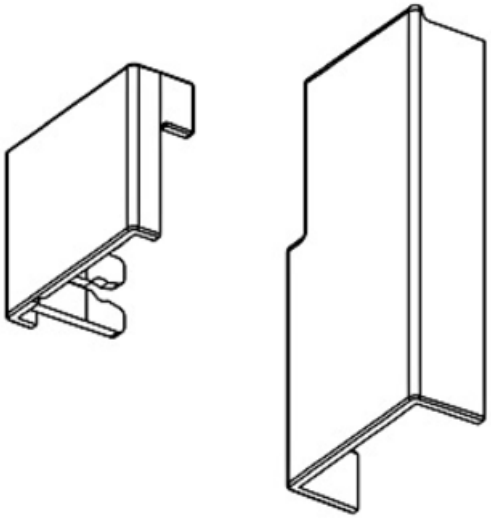

SCHRACK SET PROTEC?IE ATINGERE SEPARATOR TYTAN R D02

EAN-Code 9004840802283
Lungime 54,00mm
L??ime net? 27,00mm
In?l?ime 20,00mm
Sistem 60mm
Componente sistem D02 neozed
Dimensiune 20x10mm, 20x5mm, 30x10mm, 30x5mm
Accesorii protectie la atingere
Serie TYTAN R
Pachete disponibile 10 buc., 1000 buc.
Pret: 10,59 LEI (TVA inclus)

Detalii online: https://www.materialeelectrice.ro/set-protectie-atingere-separator-tytan-r-d02-276072