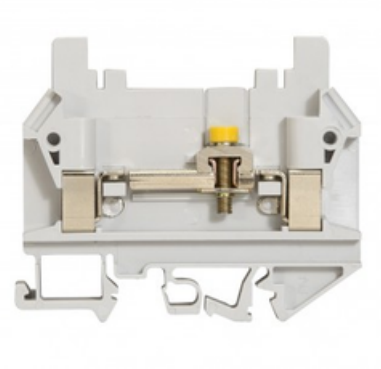

LEGRAND TERMINAL BLOCK VIKING 3 - SCREW - DISCONNECT - 1 CONNECT - PENTRU MEASUREMENT

Caracteristici tehnice
Disconnect for measurement
1 connection
With its accessories, allows intervention (measurements, maintenance, etc) on a current, Tensiune and Putere measuring circuit by keeping the current transformer secondary circuit closed
Colour : Grey
Nominal cross-section : 4 mm²
Capacity – Rigid wire : 0.25 to 4 mm²
Capacity – Flexible wire with or without ferrules : 0.25 to 4 mm²
Pitch : 8 mm
Caracteristici generale
Viking™ 3 terminal blocks with screw connection - for copper cables
Used to make the electrical connection between 2 flexible copper wires with or without ferrules or 2 rigid copper wires
2 areas for automatic insertion bridging combs up to 8 pitch (upper level only for multi-level blocks)
For rails depth 15 mm, EN 60715 depth 7.5 mm and 15 mm

Pret: 99,72 LEI (TVA inclus)

Detalii online: https://www.materialeelectrice.ro/terminal-block-viking-3-screw-disconnect-1-connect-pentru-measurement-236497