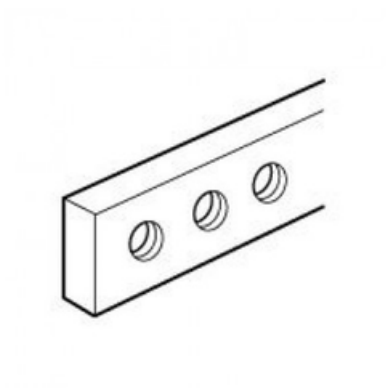

LEGRAND COPPER BAR CU TAPPED HOLES - 12 X 4 MM - MAX. 160 A - L. 990 MM

Caracteristici tehnice
Copper bars
Copper bars with tapped holes
Cross section : 12 x 4 mm
I permissible IP ? 30 : 160 A
I permissible IP > 30 : 125 A
Holes O mm : M5
Lungime : 990 mm
Caracteristici generale
Atlantic, Atlantic stainless steel and Marina cabinets - equipment
Pret: 82,18 LEI (TVA inclus)

Detalii online: https://www.materialeelectrice.ro/copper-bar-cu-tapped-holes-12-x-4-mm-max-160-a-l-990-mm-224525