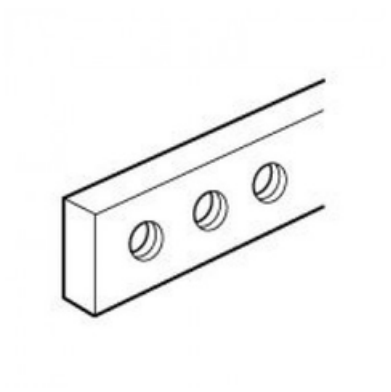

LEGRAND COPPER BAR CU TAPPED HOLES - 12 X 2 MM - MAX. 110 A - L. 990 MM

Caracteristici tehnice
Copper bars
Copper bars with tapped holes
Cross section : 12 x 2 mm
I permissible IP ? 30 : 110 A
I permissible IP > 30 : 80 A
Holes O mm : M5
Lungime : 990 mm
Caracteristici generale
Atlantic, Atlantic stainless steel and Marina cabinets - equipment
Pret: 58,62 LEI (TVA inclus)

Detalii online: https://www.materialeelectrice.ro/copper-bar-cu-tapped-holes-12-x-2-mm-max-110-a-l-990-mm-224524