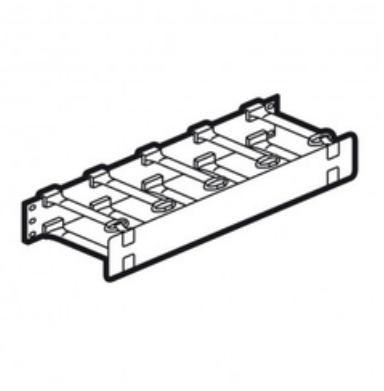

# LEGRAND 19" CORD MANAGEMENT PANEL PENTRU 19" RACK - 2 U

Caracteristici tehnice
Cabling openrack and accessories
19'' closed panel for cord management with pivoting cover - 2U - black - depth 172 mm
Caracteristici generale
Legrand cabling system LCS³ enclosures - cabling openrack and accessories
Pret: 917,46 LEI (TVA inclus)

Detalii online: https://www.materialeelectrice.ro/19-cord-management-panel-pentru-19-rack-2-u-221744