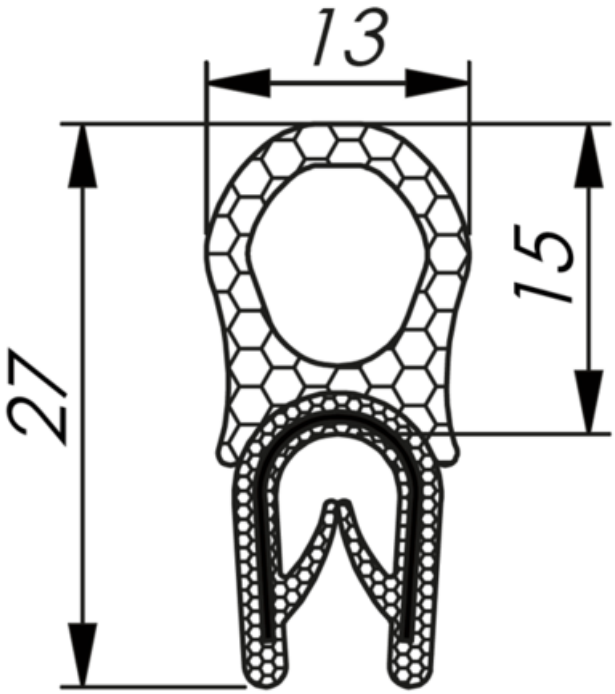

MOREK CHEDER1,0-4,0 RAL 9005 ROLA NEAGRA 50M

SKU: MCC002AB12
EAN: 4744397012029
Culoare: Black
Material: PVC, EPDM
Latime (mm): 13
Lungime (mm): 50000
Inaltime (mm): 27
Greutate (g): 13250
Clamping range (mm): 1...4
Plate thickness (mm): 1...4
Minimum bending radius: A = 60, B = 80, C = 20, D = 20
CN8 code: 39169090
Package quantity (pcs): 50

Pret: 54,67 LEI (TVA inclus)

Detalii online: https://www.materialeelectrice.ro/cheder1-0-4-0-ral-9005-rola-neagra-50m-166576