www.MATERIALE ELECTRICE.ro
Consiliere specializata

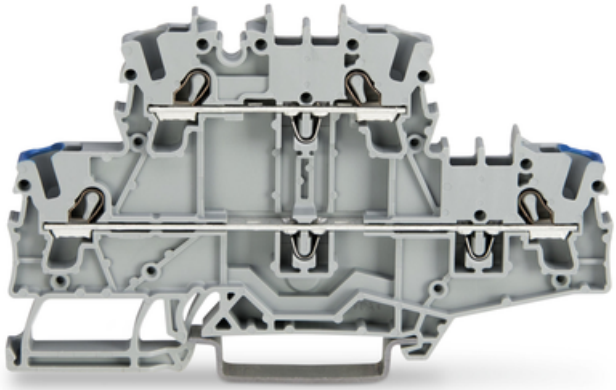

WAGO DOUBLE-DECK TERMINAL BLOCK; THROUGH/THROUGH TERMINAL BLOCK; N/L; WITHOUT MARKER CARRIER; SUITABLE FOR EX E II APPLICATIONS; BLUE CONDUCTOR ENTRY LOWER DECK; FOR DIN-RAIL 35 X 15 AND 35 X 7.5; 2.5 MM²; PUSH-IN CAGE CLAMP®; 2,50 MM²; GRAY

Ratings per: IEC/EN 60947-7-1;
Tesiune nominala (III/3): 800; V
Tensiune nominala de supratensiune (III/3): 8; kV
Curent nominal: 24; A
Curent nominal 2: 28; A
Legend (ratings): (III / 3) ? Overvoltage category III / Pollution degree 3;
Tehnologie conexiune: Push-in CAGE CLAMP®;
Number of connection points (connection type): 2;
Tip actionare: Push-in; Open Tool Slot;
Connectable conductor materials: Copper;
Nominal cross-section: 2,5 mm²;
Solid conductor: 0,25 … 4 mm² / 22 … 12 AWG;
Solid conductor; push-in termination: 0,75 … 4 mm² / 18 … 12 AWG;
Fine-stranded conductor: 0,25 … 4 mm² / 22 … 12 AWG;
Fine-stranded conductor; with insulated ferrule: 1 … 2,5 mm² / 18 … 12 AWG;
Fine-stranded conductor; with ferrule; push-in termination: 1 … 2,5 mm² / 18 … 12 AWG;
Strip length: 10 … 12 mm / 0.39 … 0.47 inch;
Number of connection points: 2;
Numar total de conexiuni: 4;
Total number of potentials: 2;
Numar nivele: 2;
Wiring type: Front-entry wiring;
Note (conductor cross-section): Depending on the conductor characteristic, a conductor with a smaller cross-section can also be inserted via push-in termination.;

Latime: 5,2 mm / 0.205 inch;
Inaltime from upper-edge of DIN-rail: 51,7 mm / 2.035 inch;
Adancime: 92,5 mm / 3.642 inch;
Design: horizontal type;
Tip montaj: DIN-35 rail;
Potential marking: N/L;
Marking level: Center/side marking;
Culoare: gray;
Material izolator: Polyamide 66 (PA 66);
Greutate: 12,5; g
Tip ambalare: BOX;
Tara de origine: DE;
GTIN: 4055143622509;
Customs tariff number: 85369010000;
Pret: 15,15 LEI (TVA inclus)

Detalii online: https://www.materialeelectrice.ro/double-deck-terminal-block-through-through-terminal-block-n-l-without-marker-carrier-suitable-for-ex-e-ii-applications-blue-conductor-entry-lower-deck-for-din-rail-35-x-15-and-35-x-7-5-2-5-mm2-push-in-cage-clamp-2-50-mm2-gray-152191