www.MATERIALE ELECTRICE.ro
Consiliere specializata

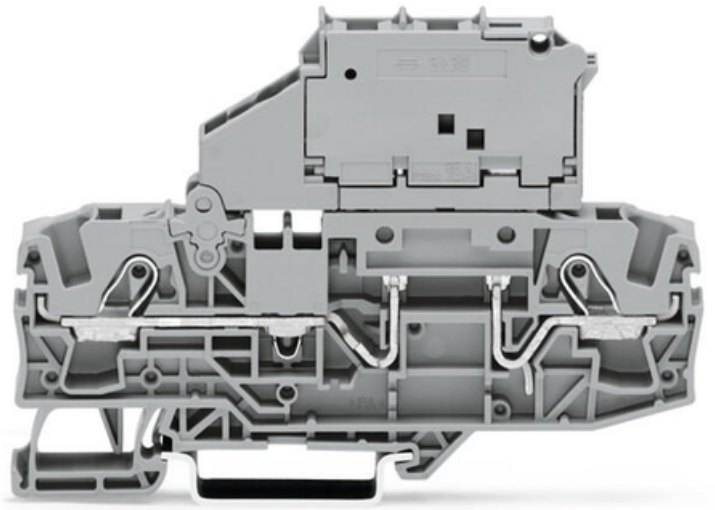

WAGO 2-CONDUCTOR FUSE TERMINAL BLOCK; WITH PIVOTING FUSE HOLDER; FOR 5 X 30 MM MINIATURE METRIC FUSE; WITH BLOWN FUSE INDICATION BY LED; 12 - 30 V; FOR DIN-RAIL 35 X 15 AND 35 X 7.5; 6 MM²; PUSH-IN CAGE CLAMP®; 6,00 MM²; GRAY

Ratings per: IEC/EN 60947-7-3;
Tesiune nominala (III/3): 800; V
Tensiune nominala de supratensiune (III/3): 8; kV
Curent nominal: 10; A
Operation status indicator: 12 … 30 V;
Legend (ratings): (III / 3) ? Overvoltage category III / Pollution degree 3;
Tensiune nominala CSA (Use Group B): 600; V
Curent nominal CSA (Use Group B): 15; A
Tensiune nominala CSA (Use Group C): 600; V
Curent nominal CSA (Use Group C): 15; A
Tehnologie conexiune: Push-in CAGE CLAMP®;
Tip actionare: Push-in; Open Tool Slot;
Connectable conductor materials: Copper;
Nominal cross-section: 6 mm²;
Solid conductor: 0,5 … 10 mm² / 20 … 8 AWG;
Solid conductor; push-in termination: 1 … 10 mm² / 14 … 8 AWG;
Fine-stranded conductor: 0,5 … 10 mm² / 20 … 8 AWG;
Fine-stranded conductor; with insulated ferrule: 2,5 … 6 mm² / 16 … 10 AWG;
Fine-stranded conductor; with ferrule; push-in termination: 2,5 … 6 mm² / 16 … 10 AWG;
Strip length: 13 … 15 mm / 0.51 … 0.59 inch;
Numar total de conexiuni: 2;
Total number of potentials: 1;
Numar nivele: 1;
Wiring type: Front-entry wiring;

Number of jumper slots: 2;
Latime: 7,5 mm / 0.295 inch;
Inaltime from upper-edge of DIN-rail: 59 mm / 2.323 inch;
Adancime: 96,3 mm / 3.791 inch;
Design: horizontal;
Tip montaj: DIN-35 rail;
Marking level: Center/side marking;
Culoare: gray;
Material izolator: Polyamide 66 (PA 66);
Greutate: 25,6; g
Product Group: 22 (TOPJOB S);
Tip ambalare: BOX;
Tara de origine: DE;
GTIN: 4045454823979;
Customs tariff number: 85369095990;
Pret: 72,78 LEI (TVA inclus)

Detalii online: https://www.materialeelectrice.ro/2-conductor-fuse-terminal-block-with-pivoting-fuse-holder-for-5-x-30-mm-miniature-metric-fuse-with-blown-fuse-indication-by-led-12-30-v-for-din-rail-35-x-15-and-35-x-7-5-6-mm2-push-in-cage-clamp-6-00-mm2-gray-151819