www.MATERIALE ELECTRICE.ro
Consiliere specializata

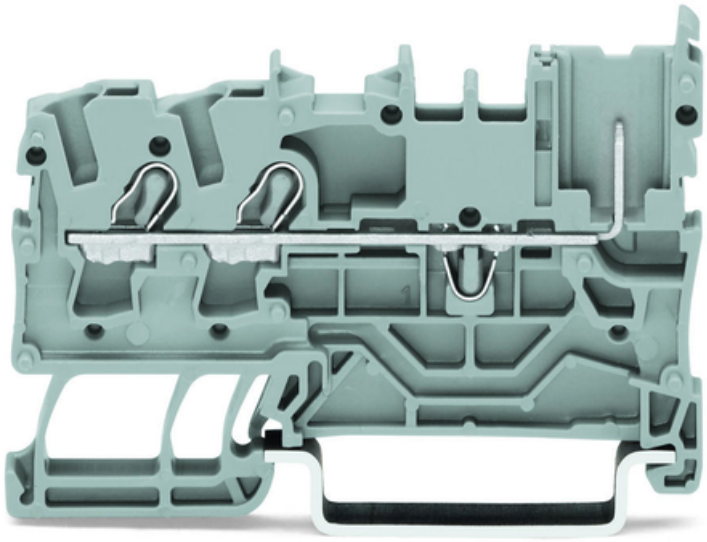

WAGO 2-CONDUCTOR/1-PIN CARRIER TERMINAL BLOCK; SUITABLE FOR EX NA APPLICATIONS; FOR DIN-RAIL 35 X 15 AND 35 X 7.5; 2.5 MM²; PUSH-IN CAGE CLAMP®; 2,50 MM²; GRAY

Ratings per: IEC/EN 60947-7-1;
Curent nominal: 20; A
Tensiune nominala EN (Ex e II): 630; V
Tehnologie conexiune: Push-in CAGE CLAMP®;
Number of connection points (connection type): 2;
Tip actionare: Open Tool Slot; Push-in;
Connectable conductor materials: Copper;
Nominal cross-section: 2,5 mm²;
Solid conductor: 0,25 … 4 mm² / 22 … 12 AWG;
Solid conductor; push-in termination: 0,75 … 4 mm² / 18 … 12 AWG;
Fine-stranded conductor: 0,25 … 4 mm² / 22 … 12 AWG;
Fine-stranded conductor; with insulated ferrule: 1 … 2,5 mm² / 18 … 12 AWG;
Fine-stranded conductor; with ferrule; push-in termination: 1 … 2,5 mm² / 18 … 12 AWG;
Strip length: 10 … 12 mm / 0.39 … 0.47 inch;
Number of connection points: 1;
Numar total de conexiuni: 2;
Total number of potentials: 1;
Numar nivele: 1;
Wiring type: Front-entry wiring;
Note (conductor cross-section): Depending on the conductor characteristic, a conductor with a smaller cross-section can also be inserted via push-in termination.;
Latime: 5,2 mm / 0.205 inch;
Inaltime from upper-edge of DIN-rail: 32,5 mm / 1.28 inch;
Adancime: 59,2 mm / 2.331 inch;
Design: horizontal type;

Tip montaj: DIN-35 rail;
Marking level: Center/side marking;
Culoare: gray;
Material izolator: Polyamide 66 (PA 66);
Fire load: 0,136; MJ
Greutate: 6,3; g
Tip ambalare: BOX;
Tara de origine: CN;
GTIN: 4055143329422;
Customs tariff number: 85366990990;
Pret: 9,77 LEI (TVA inclus)

Detalii online: https://www.materialeelectrice.ro/2-conductor-1-pin-carrier-terminal-block-suitable-for-ex-na-applications-for-din-rail-35-x-15-and-35-x-7-5-2-5-mm2-push-in-cage-clamp-2-50-mm2-gray-151728