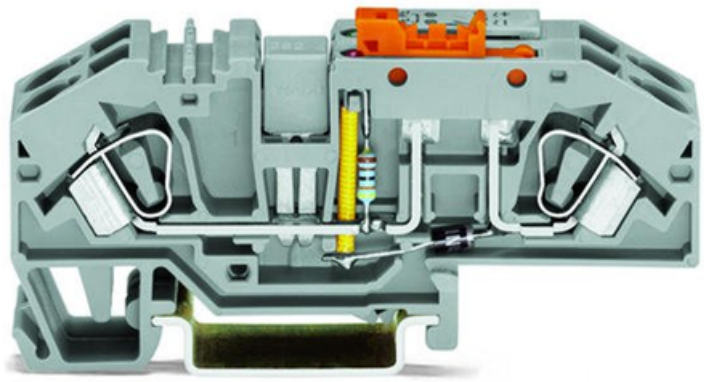

WAGO GROUND CONDUCTOR DISCONNECT TERMINAL BLOCK; WITH TEST OPTION; WITH ORANGE DISCONNECT LINK; 48 V; 6 MM²; CAGE CLAMP®; 6,00 MM²; GRAY

Operation status indicator: 48 V;
Tehnologie conexiune: CAGE CLAMP®;
Tip actionare: Operating tool;
Connectable conductor materials: Copper;
Solid conductor: 0,2 … 6 mm² / 24 … 10 AWG;
Fine-stranded conductor: 0,2 … 6 mm² / 24 … 10 AWG;
Strip length: 12 … 13 mm / 0.47 … 0.51 inch;
Numar total de conexiuni: 4;
Total number of potentials: 4;
Numar nivele: 1;
Wiring type: Front-entry wiring;
Latime: 16 mm / 0.63 inch;
Inaltime from upper-edge of DIN-rail: 37 mm / 1.457 inch;
Adancime: 85 mm / 3.346 inch;
Design: angled;
Tip montaj: DIN-35 rail;
Marking level: Center marking;
Culoare: gray;
Greutate: 40,7; g
Product Group: 1 (Rail Mounted Terminal Blocks);
Tip ambalare: BOX;
Tara de origine: DE;
GTIN: 4050821666028;
Customs tariff number: 85365080900;
Pret: 179,01 LEI (TVA inclus)

Detalii online: https://www.materialeelectrice.ro/ground-conductor-disconnect-terminal-block-with-test-option-with-orange-disconnect-link-48-v-6-mm2-cage-clamp-6-00-mm2-gray-151505