www.MATERIALE ELECTRICE.ro
Consiliere specializata

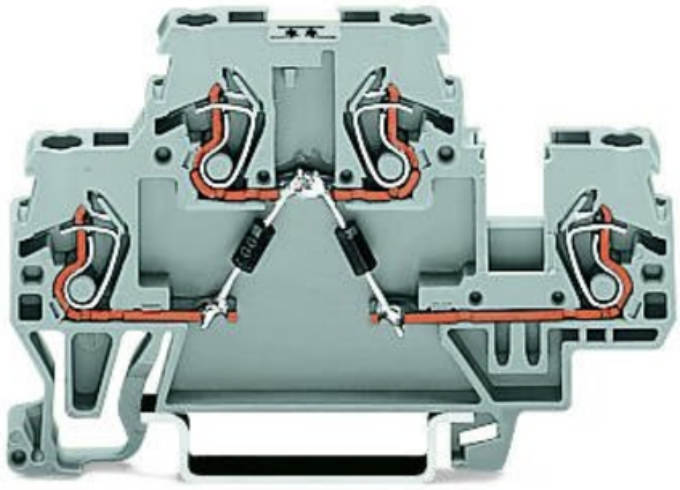

WAGO COMPONENT TERMINAL BLOCK; DOUBLE-DECK; WITH DIODE AND RESISTOR; FOR DIN-RAIL 35 X 15 AND 35 X 7.5; 2.5 MM²; CAGE CLAMP®; 2,50 MM²; GRAY

Tesiune nominala: 250; V
Reverse voltage: 1.000; V
Ratings per: IEC/EN 60947-7-1;
Curent nominal: 0,5; A
Tehnologie conexiune: CAGE CLAMP®;
Tip actionare: Operating tool;
Connectable conductor materials: Copper;
Solid conductor: 0,08 … 2,5 mm² / 28 … 12 AWG;
Fine-stranded conductor: 0,08 … 4 mm² / 28 … 12 AWG;
Strip length: 6 … 7 mm / 0.24 … 0.28 inch;
Numar total de conexiuni: 4;
Numar nivele: 2;
Wiring type: Front-entry wiring;
Latime: 5 mm / 0.197 inch;
Inaltime from upper-edge of DIN-rail: 40 mm / 1.575 inch;
Adancime: 70 mm / 2.756 inch;
Design: horizontal type;
Tip montaj: DIN-35 rail;
Marking level: Side marking;
Culoare: gray;
Material izolator: Polyamide 66 (PA 66);
Greutate: 9,8; g
Product Group: 16 (Rail Mounted Terminal Block with CCC);
Tip ambalare: BOX;
Tara de origine: DE;

GTIN: 4045454198657;
Customs tariff number: 85369010000;
Pret: 53,67 LEI (TVA inclus)

Detalii online: https://www.materialeelectrice.ro/component-terminal-block-double-deck-with-diode-and-resistor-for-din-rail-35-x-15-and-35-x-7-5-2-5-mm2-cage-clamp-2-50-mm2-gray-151406