www.MATERIALE ELECTRICE.ro
Consiliere specializata

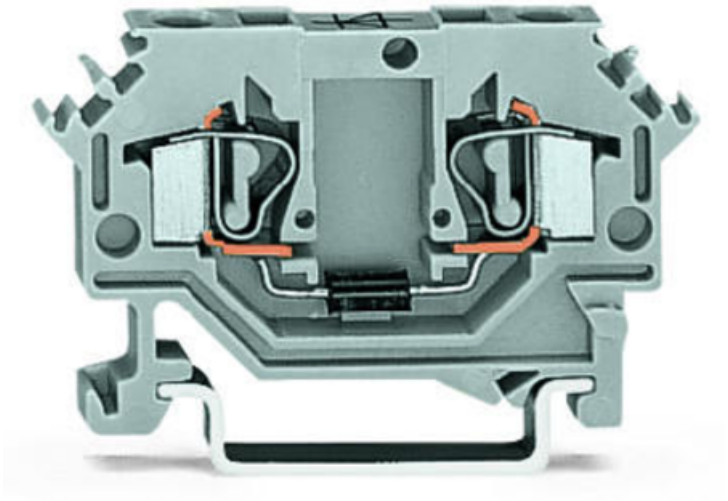

WAGO COMPONENT TERMINAL BLOCK; 2-CONDUCTOR; WITH DIODE 1N4007; ANODE, LEFT SIDE; FOR DIN-RAIL 35 X 15 AND 35 X 7.5; 4 MM²; CAGE CLAMP®; 4,00 MM²; GRAY

Tesiune nominala: 250; V
Reverse voltage: 1.000; V
Ratings per: IEC/EN 60947-7-1;
Curent nominal: 0,5; A
Tehnologie conexiune: CAGE CLAMP®;
Tip actionare: Operating tool;
Connectable conductor materials: Copper; Aluminum;
Solid conductor: 0.08 … 4 mm² / 28 … 12 AWG;
Fine-stranded conductor: 0.08 … 4 mm² / 28 … 12 AWG;
Strip length: 9 … 10 mm / 0.35 … 0.39 inch;
Numar total de conexiuni: 2;
Total number of potentials: 1;
Numar nivele: 1;
Wiring type: Front-entry wiring;
Latime: 6 mm / 0.236 inch;
Inaltime from upper-edge of DIN-rail: 29 mm / 1.142 inch;
Adancime: 53 mm / 2.087 inch;
Design: horizontal;
Tip montaj: DIN-35 rail;
Marking level: Side marking;
Culoare: gray;
Material izolator: Polyamide 66 (PA 66);
Fire load: 0,143; MJ
Greutate: 7,3; g
Product Group: 1 (Rail Mounted Terminal Blocks);

Tip ambalare: BOX;
Tara de origine: DE;
GTIN: 4045454196936;
Customs tariff number: 85369010000;
Pret: 25,10 LEI (TVA inclus)

Detalii online: https://www.materialeelectrice.ro/component-terminal-block-2-conductor-with-diode-1n4007-anode-left-side-for-din-rail-35-x-15-and-35-x-7-5-4-mm2-cage-clamp-4-00-mm2-gray-151113