www.MATERIALE ELECTRICE.ro
Consiliere specializata

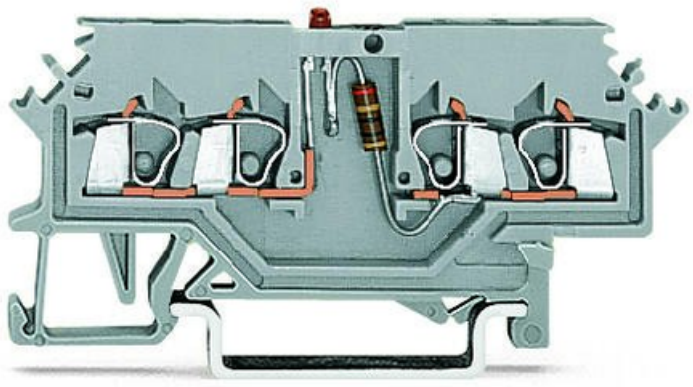

WAGO COMPONENT TERMINAL BLOCK; 4-CONDUCTOR; LED (RED); 24 VDC; FOR DIN-RAIL 35 X 15 AND 35 X 7.5; 1.5 MM²; CAGE CLAMP®; 1,50 MM²; GRAY

Voltage type 1: DC;
Tesiune nominala: 24; V
Ratings per: IEC/EN 60947-7-1;
Curent nominal: 0,025; A
Tehnologie conexiune: CAGE CLAMP®;
Tip actionare: Operating tool;
Connectable conductor materials: Copper;
Solid conductor: 0.08 … 1.5 mm² / 28 … 16 AWG;
Fine-stranded conductor: 0.08 … 1.5 mm² / 28 … 16 AWG;
Strip length: 8 … 9 mm / 0.31 … 0.35 inch;
Numar total de conexiuni: 4;
Total number of potentials: 1;
Numar nivele: 1;
Wiring type: Front-entry wiring;
Latime: 4 mm / 0.157 inch;
Inaltime from upper-edge of DIN-rail: 27 mm / 1.063 inch;
Adancime: 68 mm / 2.677 inch;
Design: horizontal;
Tip montaj: DIN-35 rail;
Marking level: Side marking;
Culoare: gray;
Material izolator: Polyamide 66 (PA 66);
Fire load: 0,109; MJ
Greutate: 5,9; g
Product Group: 1 (Rail Mounted Terminal Blocks);
Tip ambalare: BOX;

Tara de origine: DE;
GTIN: 4045454193959;
Customs tariff number: 85369010000;
Pret: 38,27 LEI (TVA inclus)

Detalii online: https://www.materialeelectrice.ro/component-terminal-block-4-conductor-led-red-24-vdc-for-din-rail-35-x-15-and-35-x-7-5-1-5-mm2-cage-clamp-1-50-mm2-gray-151091