www.MATERIALE ELECTRICE.ro
Consiliere specializata

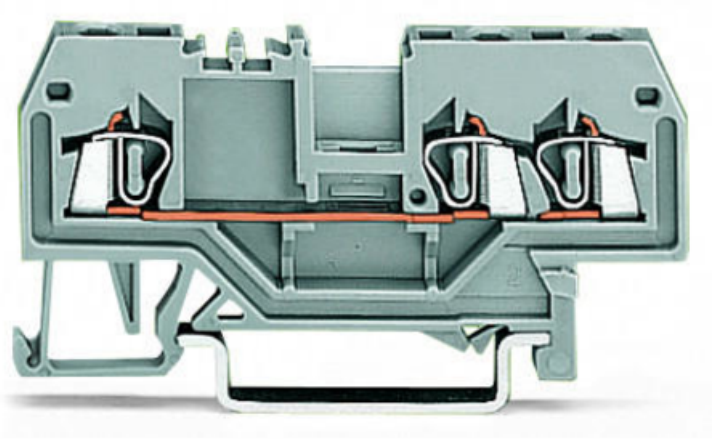

WAGO 3-CONDUCTOR THROUGH TERMINAL BLOCK; 1.5 MM²; CENTER MARKING; FOR DIN-RAIL 35 X 15 AND 35 X 7.5; CAGE CLAMP®; 1,50 MM²; BLACK

Ratings per: IEC/EN 60947-7-1;
Tesiune nominala (III/3): 800; V
Tensiune nominala de supratensiune (III/3): 8; kV
Curent nominal: 18; A
Legend (ratings): (III / 3) ? Overvoltage category III / Pollution degree 3;
Tehnologie conexiune: CAGE CLAMP®;
Tip actionare: Operating tool;
Connectable conductor materials: Copper;
Solid conductor: 0,08 … 1,5 mm² / 28 … 16 AWG;
Fine-stranded conductor: 0,08 … 1,5 mm² / 28 … 16 AWG;
Strip length: 8 … 9 mm / 0.31 … 0.35 inch;
Numar total de conexiuni: 3;
Total number of potentials: 1;
Numar nivele: 1;
Wiring type: Front-entry wiring;
Latime: 4 mm / 0.157 inch;
Inaltime from upper-edge of DIN-rail: 27 mm / 1.063 inch;
Adancime: 62,5 mm / 2.461 inch;
Design: horizontal type;
Tip montaj: DIN-35 rail;
Marking level: Center marking;
Culoare: black;
Material izolator: Polyamide 66 (PA 66);
Fire load: 0,104; MJ
Greutate: 5,2; g
Tip ambalare: BOX;

Tara de origine: DE;
GTIN: 4044918650540;
Customs tariff number: 85369010000;
Pret: 6,13 LEI (TVA inclus)

Detalii online: https://www.materialeelectrice.ro/3-conductor-through-terminal-block-1-5-mm2-center-marking-for-din-rail-35-x-15-and-35-x-7-5-cage-clamp-1-50-mm2-black-150560