www.MATERIALE ELECTRICE.ro
Consiliere specializata

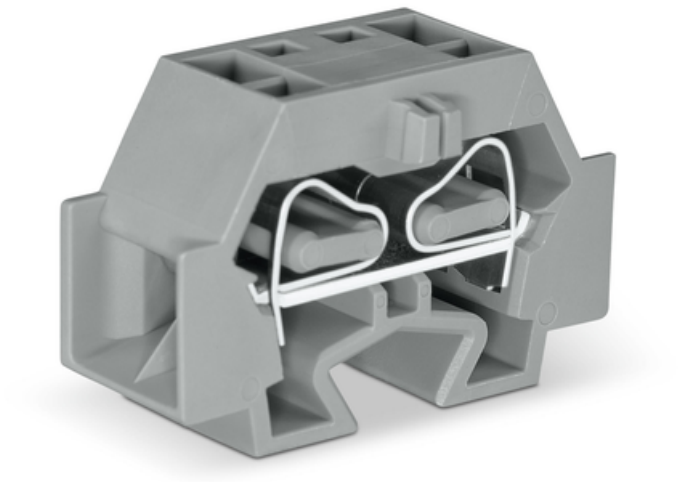

WAGO SPACE-SAVING, 4-CONDUCTOR END TERMINAL BLOCK; WITHOUT PUSH-BUTTONS; WITHOUT PROTRUDING SNAP-IN MOUNTING FOOT; FOR TERMINAL STRIPS WITH SNAP-IN MOUNTING FEET; 4 MM²; CAGE CLAMP®; 4,00 MM²; GRAY

Tesiune nominala (III/3): 630; V
Tensiune nominala de supratensiune (III/3): 8; kV
Curent nominal: 32; A
Legend (ratings): (III / 3) ? Overvoltage category III / Pollution degree 3;
Tehnologie conexiune: CAGE CLAMP®;
Tip actionare: Operating tool;
Connectable conductor materials: Copper;
Solid conductor: 0,08 … 4 mm² / 28 … 12 AWG;
Fine-stranded conductor: 0,08 … 4 mm² / 28 … 12 AWG;
Strip length: 9 … 10 mm / 0.35 … 0.39 inch;
Numar total de conexiuni: 4;
Total number of potentials: 1;
Numar nivele: 1;
Wiring type: Side-entry wiring;
Latime: 12 mm / 0.472 inch;
Inaltime de la fata: 23 mm / 0.906 inch;
Adancime: 33,5 mm / 1.319 inch;
Design: horizontal;
Tip montaj: Snap-in mounting foot;
Marking level: Side marking;
Culoare: gray;
Fire load: 0,098; MJ
Greutate: 6,9; g
Product Group: 9 (Std. Chassis Mt. Blocks);
Tip ambalare: BOX;

Tara de origine: CN;
GTIN: 4044918641234;
Customs tariff number: 85369010000;
Pret: 6,31 LEI (TVA inclus)

Detalii online: https://www.materialeelectrice.ro/space-saving-4-conductor-end-terminal-block-without-push-buttons-without-protruding-snap-in-mounting-foot-for-terminal-strips-with-snap-in-mounting-feet-4-mm2-cage-clamp-4-00-mm2-gray-150375