www.MATERIALE ELECTRICE.ro
Consiliere specializata

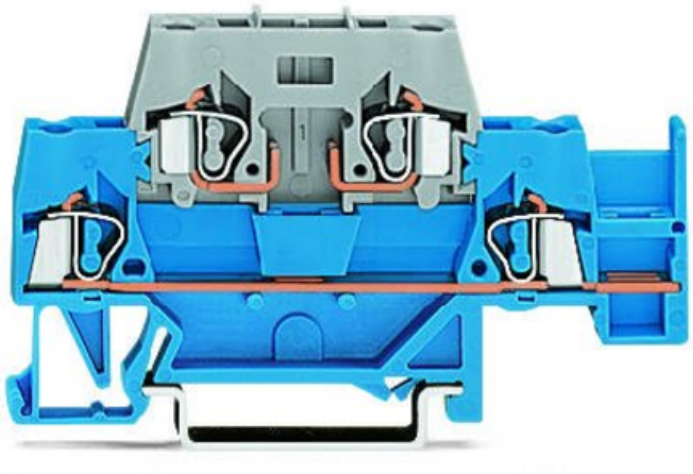

WAGO DOUBLE-DECK TERMINAL BLOCK; WITH ADDITIONAL JUMPER POSITION ON LOWER LEVEL; FOR DIN-RAIL 35 X 15 AND 35 X 7.5; 2.5 MM²; CAGE CLAMP®; 2,50 MM²; BLUE/GRAY

Ratings per: IEC/EN 60947-7-1;
Tesiune nominala (III/3): 400; V
Tensiune nominala de supratensiune (III/3): 6; kV
Curent nominal: 10; A
Curent nominal 2: 20; A
Legend (ratings): (III / 3) ? Overvoltage category III / Pollution degree 3;
Tehnologie conexiune: CAGE CLAMP®;
Tip actionare: Operating tool;
Connectable conductor materials: Copper; Aluminum;
Solid conductor: 0.08 … 2.5 mm² / 28 … 12 AWG;
Fine-stranded conductor: 0.08 … 2.5 mm² / 28 … 12 AWG;
Strip length: 8 … 9 mm / 0.31 … 0.35 inch;
Numar total de conexiuni: 4;
Total number of potentials: 2;
Numar nivele: 2;
Wiring type: Front-entry wiring;
Note (conductor cross-section): 12 AWG: THHN, THWN;
Latime: 5 mm / 0.197 inch;
Inaltime from upper-edge of DIN-rail: 39.5 mm / 1.555 inch;
Adancime: 74 mm / 2.913 inch;
Design: horizontal;
Tip montaj: DIN-35 rail;
Marking level: without marking level;
Culoare: blue/gray;
Material izolator: Polyamide 66 (PA 66);

Fire load: 0,156; MJ
Greutate: 9,7; g
Product Group: 1 (Rail Mounted Terminal Blocks);
Tip ambalare: BOX;
Tara de origine: CN;
GTIN: 4050821293682;
Customs tariff number: 85369010000;
Pret: 19,97 LEI (TVA inclus)

Detalii online: https://www.materialeelectrice.ro/double-deck-terminal-block-with-additional-jumper-position-on-lower-level-for-din-rail-35-x-15-and-35-x-7-5-2-5-mm2-cage-clamp-2-50-mm2-blue-gray-145680