www.MATERIALE ELECTRICE.ro
Consiliere specializata

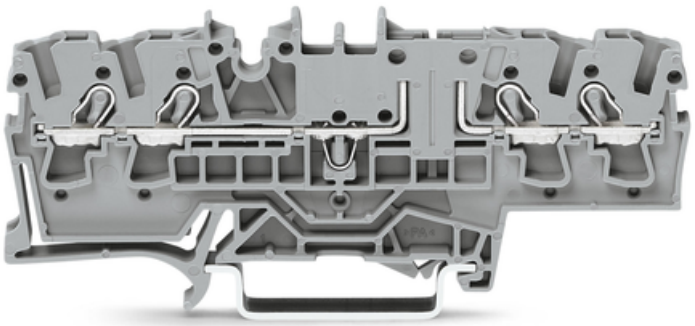

WAGO 4-CONDUCTOR CARRIER TERMINAL BLOCK; FOR DIN-RAIL 35 X 15 AND 35 X 7.5; 2.5 MM²; PUSH-IN CAGE CLAMP®; 2,50 MM²; GRAY

Ratings per: IEC/EN 60947-7-1;
Tesiune nominala (III/3): 400; V
Tensiune nominala de supratensiune (III/3): 6; kV
Curent nominal: 16; A
Legend (ratings): (III / 3) ? Overvoltage category III / Pollution degree 3;
Tensiune nominala UL (Use Group B): 300; V
Curent nominal UL (Use Group B): 15; A
Tensiune nominala UL (Use Group C): 300; V
Curent nominal UL (Use Group C): 15; A
Certificari: UL 1059;
Tensiune nominala CSA (Use Group B): 600; V
Curent nominal CSA (Use Group B): 10; A
Tensiune nominala CSA (Use Group C): 600; V
Curent nominal CSA (Use Group C): 10; A
Tehnologie conexiune: Push-in CAGE CLAMP®;
Tip actionare: Push-in; Open Tool Slot;
Connectable conductor materials: Copper;
Nominal cross-section: 2.5 mm²;
Solid conductor: 0,25 … 4 mm² / 22 … 12 AWG;
Solid conductor; push-in termination: 0.75 … 4 mm² / 18 … 12 AWG;
Fine-stranded conductor: 0,25 … 4 mm² / 22 … 12 AWG;
Fine-stranded conductor; with insulated ferrule: 1 … 2.5 mm² / 18 … 12 AWG;
Fine-stranded conductor; with ferrule; push-in termination: 1 … 2.5 mm² / 18 … 12 AWG;
Strip length: 10 … 12 mm / 0.39 … 0.47 inch;
Numar total de conexiuni: 4;
Total number of potentials: 2;

Numar nivele: 1;
Wiring type: Front-entry wiring;
Note (conductor cross-section): Depending on the conductor characteristic, a conductor with a smaller cross section can also be inserted via push-in termination.;
Number of jumper slots: 2;
Latime: 5.2 mm / 0.205 inch;
Inaltime from upper-edge of DIN-rail: 32.9 mm / 1.295 inch;
Adancime: 87.5 mm / 3.445 inch;
Design: horizontal;
Tip montaj: DIN-35 rail;
Marking level: Center/side marking;
Culoare: gray;
Material izolator: Polyamide 66 (PA 66);
Fire load: 0,192; MJ
Greutate: 9,3; g
Product Group: 22 (TOPJOB S);
Tip ambalare: BOX;
Tara de origine: CN;
GTIN: 4045454974787;
Customs tariff number: 85369010000;
Pret: 20,90 LEI (TVA inclus)

Detalii online: https://www.materialeelectrice.ro/4-conductor-carrier-terminal-block-for-din-rail-35-x-15-and-35-x-7-5-2-5-mm2-push-in-cage-clamp-2-50-mm2-gray-144756