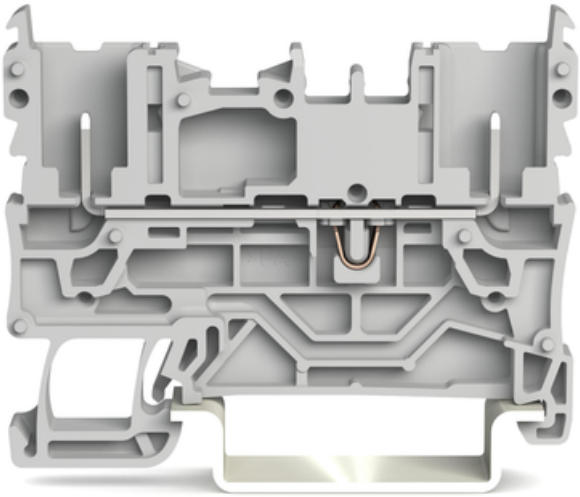

WAGO 2-PIN CARRIER TERMINAL BLOCK; FOR DIN-RAIL 35 X 15 AND 35 X 7.5; GRAY

Ratings per: IEC/EN 60947-7-1;
Tesiune nominala (III/3): 690; V
Tensiune nominala de supratensiune (III/3): 6; kV
Curent nominal: 24; A
Curent nominal 2: 28; A
Legend (ratings): (III / 3) ? Overvoltage category III / Pollution degree 3;
Fine-stranded conductor; with insulated ferrule: 1 … 2,5 mm² / 18 … 12 AWG;
Fine-stranded conductor; with ferrule; push-in termination: 1 … 2,5 mm² / 18 … 12 AWG;
Latime: 5,2 mm / 0.205 inch;
Inaltime from upper-edge of DIN-rail: 32,5 mm / 1.28 inch;
Adancime: 52 mm / 2.047 inch;
Tip montaj: DIN-35 rail;
Marking level: Center/side marking;
Culoare: gray;
Tip ambalare: BOX;
Tara de origine: CN;
Customs tariff number: 85366990990;
Pret: 5,01 LEI (TVA inclus)

Detalii online: https://www.materialeelectrice.ro/2-pin-carrier-terminal-block-for-din-rail-35-x-15-and-35-x-7-5-gray-144626