www.MATERIALE ELECTRICE.ro
Consiliere specializata

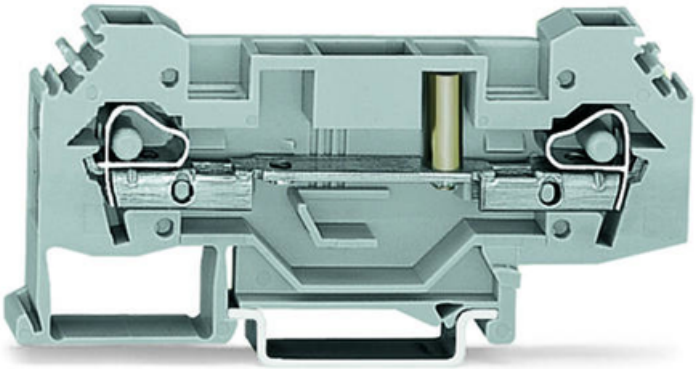

WAGO 2-CONDUCTOR THROUGH TERMINAL BLOCK; 6 MM²; WITH TEST OPTION; FOR 4 MM Ø TEST PLUGS; SAME PROFILE AS 2-CONDUCTOR DISCONNECT TERMINAL BLOCK; LATERAL MARKER SLOTS; FOR DIN-RAIL 35 X 15 AND 35 X 7.5; CAGE CLAMP®; 6,00 MM²; GRAY

Ratings per: IEC/EN 60947-7-1;
Tesiune nominala (III/3): 400; V
Tensiune nominala de supratensiune (III/3): 6; kV
Curent nominal: 41; A
Legend (ratings): (III / 3) ? Overvoltage category III / Pollution degree 3;
Tehnologie conexiune: CAGE CLAMP®;
Tip actionare: Operating tool;
Connectable conductor materials: Copper;
Solid conductor: 0,2 … 6 mm² / 24 … 10 AWG;
Fine-stranded conductor: 0,2 … 6 mm² / 24 … 10 AWG;
Strip length: 12 … 13 mm / 0.47 … 0.51 inch;
Numar total de conexiuni: 2;
Total number of potentials: 1;
Numar nivele: 1;
Wiring type: Side-entry wiring;
Latime: 8 mm / 0.315 inch;
Inaltime from upper-edge of DIN-rail: 37 mm / 1.457 inch;
Adancime: 87,5 mm / 3.445 inch;
Design: horizontal type;
Tip montaj: DIN-35 rail;
Marking level: Side marking;
Culoare: gray;
Material izolator: Polyamide 66 (PA 66);
Greutate: 19,2; g

Product Group: 1 (Rail Mounted Terminal Blocks);
Tip ambalare: BOX;
Tara de origine: CN;
GTIN: 4044918673365;
Customs tariff number: 85369010000;
Pret: 16,80 LEI (TVA inclus)

Detalii online: https://www.materialeelectrice.ro/2-conductor-through-terminal-block-6-mm2-with-test-option-for-4-mm-oe-test-plugs-same-profile-as-2-conductor-disconnect-terminal-block-lateral-marker-slots-for-din-rail-35-x-15-and-35-x-7-5-cage-clamp-6-00-mm2-gray-144173