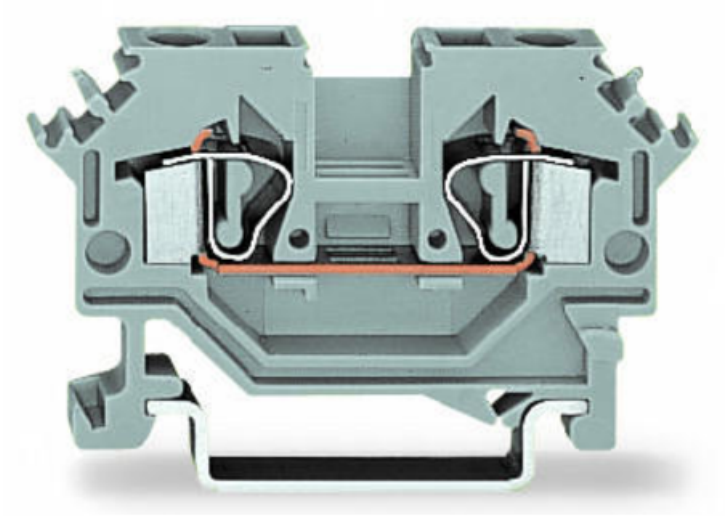

WAGO 2-CONDUCTOR THROUGH TERMINAL BLOCK; 4 MM²; SUITABLE FOR EX E II APPLICATIONS; LATERAL MARKER SLOTS; FOR DIN-RAIL 35 X 15 AND 35 X 7.5; CAGE CLAMP®; 4,00 MM²; LIGHT GRAY

Ratings per: IEC/EN 60947-7-1;
Tensiune nominala EN (Ex e II): 550; V
Curent nominal (Ex e II): 30; A
Tehnologie conexiune: CAGE CLAMP®;
Tip actionare: Operating tool;
Connectable conductor materials: Copper; Aluminum;
Solid conductor: 0,08 … 4 mm² / 28 … 12 AWG;
Fine-stranded conductor: 0,08 … 4 mm² / 28 … 12 AWG;
Strip length: 9 … 10 mm / 0.35 … 0.39 inch;
Numar total de conexiuni: 2;
Total number of potentials: 1;
Numar nivele: 1;
Wiring type: Front-entry wiring;
Latime: 6 mm / 0.236 inch;
Inaltime from upper-edge of DIN-rail: 29 mm / 1.142 inch;
Adancime: 53 mm / 2.087 inch;
Design: horizontal type;
Tip montaj: DIN-35 rail;
Marking level: Side marking;
Culoare: light gray;
Material izolator: Polyamide 66 (PA 66);
Fire load: 0,128; MJ
Greutate: 6,9; g
Tip ambalare: BOX;
Tara de origine: DE;

GTIN: 4044918500746;
Customs tariff number: 85369010000;
Pret: 7,24 LEI (TVA inclus)

Detalii online: https://www.materialeelectrice.ro/2-conductor-through-terminal-block-4-mm2-suitable-for-ex-e-ii-applications-lateral-marker-slots-for-din-rail-35-x-15-and-35-x-7-5-cage-clamp-4-00-mm2-light-gray-144003