www.MATERIALE ELECTRICE.ro
Consiliere specializata

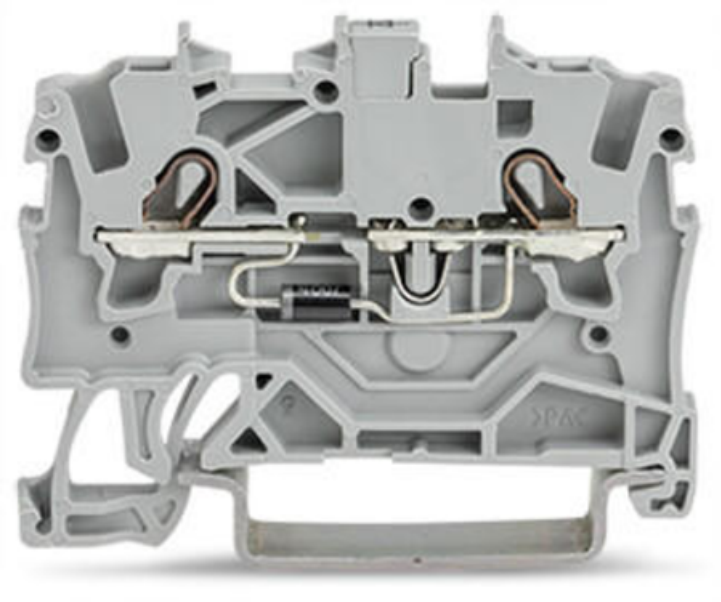

WAGO COMPONENT TERMINAL BLOCK; 2-CONDUCTOR; WITH DIODE 1N4007; ANODE, LEFT SIDE; FOR DIN-RAIL 35 X 15 AND 35 X 7.5; 1.5 MM²; PUSH-IN CAGE CLAMP®; 1,50 MM²; GRAY

Tesiune nominala: 250; V
Reverse voltage: 1.000; V
Ratings per: IEC/EN 60947-7-1;
Curent nominal: 0,5; A
Tensiune nominala UL (Use Group B): 600; V
Curent nominal UL (Use Group B): 15; A
Tensiune nominala UL (Use Group C): 600; V
Curent nominal UL (Use Group C): 15; A
Certificari: UL 1059;
Tehnologie conexiune: Push-in CAGE CLAMP®;
Tip actionare: Push-in; Open Tool Slot;
Connectable conductor materials: Copper;
Nominal cross-section: 1.5 mm²;
Solid conductor: 0.25 … 2.5 mm² / 22 … 14 AWG;
Solid conductor; push-in termination: 0.75 … 2.5 mm² / 18 … 14 AWG;
Fine-stranded conductor: 0.25 … 2.5 mm² / 22 … 14 AWG;
Fine-stranded conductor; with insulated ferrule: 0.75 … 1.5 mm² / 18 … 16 AWG;
Fine-stranded conductor; with ferrule; push-in termination: 0.75 … 1.5 mm² / 18 … 16 AWG;
Strip length: 9 … 11 mm / 0.35 … 0.43 inch;
Numar total de conexiuni: 2;
Total number of potentials: 1;
Numar nivele: 1;
Wiring type: Front-entry wiring;
Note (conductor cross-section): Depending on the conductor characteristic, a conductor with a smaller cross section can also be inserted via push-in termination.;

Latime: 4.2 mm / 0.165 inch;
Inaltime from upper-edge of DIN-rail: 32.9 mm / 1.295 inch;
Adancime: 48.5 mm / 1.909 inch;
Design: horizontal;
Tip montaj: DIN-35 rail;
Marking level: Center/side marking;
Culoare: gray;
Material izolator: Polyamide 66 (PA 66);
Fire load: 0,106; MJ
Greutate: 4,3; g
Product Group: 22 (TOPJOB S);
Tip ambalare: BOX;
Tara de origine: CN;
GTIN: 4045454537548;
Customs tariff number: 85369010000;
Pret: 21,52 LEI (TVA inclus)

Detalii online: https://www.materialeelectrice.ro/component-terminal-block-2-conductor-with-diode-1n4007-anode-left-side-for-din-rail-35-x-15-and-35-x-7-5-1-5-mm2-push-in-cage-clamp-1-50-mm2-gray-143923