www.MATERIALE ELECTRICE.ro
Consiliere specializata

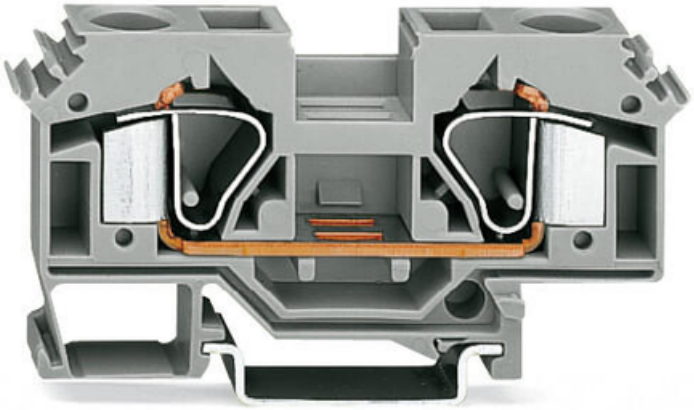

WAGO 2-CONDUCTOR THROUGH TERMINAL BLOCK; 16 MM²; SUITABLE FOR EX E II APPLICATIONS; LATERAL MARKER SLOTS; FOR DIN-RAIL 35 X 15 AND 35 X 7.5; CAGE CLAMP®; 16,00 MM²; LIGHT GRAY

Ratings per: IEC/EN 60947-7-1;
Tensiune nominala EN (Ex e II): 550; V
Curent nominal (Ex e II): 72; A
Tehnologie conexiune: CAGE CLAMP®;
Tip actionare: Operating tool;
Connectable conductor materials: Copper;
Solid conductor: 0,2 … 16 mm² / 24 … 6 AWG;
Fine-stranded conductor: 0,2 … 16 mm² / 24 … 6 AWG;
Strip length: 16 … 17 mm / 0.63 … 0.67 inch;
Numar total de conexiuni: 2;
Total number of potentials: 1;
Numar nivele: 1;
Wiring type: Front-entry wiring;
Latime: 12 mm / 0.472 inch;
Inaltime from upper-edge of DIN-rail: 37,5 mm / 1.476 inch;
Adancime: 80 mm / 3.15 inch;
Design: horizontal;
Tip montaj: DIN-35 rail;
Marking level: Side marking;
Culoare: light gray;
Material izolator: Polyamide 66 (PA 66);
Fire load: 0,465; MJ
Greutate: 31,4; g
Product Group: 1 (Rail Mounted Terminal Blocks);
Tip ambalare: BOX;

Tara de origine: DE;
GTIN: 4044918308229;
Customs tariff number: 85369010000;
Pret: 19,48 LEI (TVA inclus)

Detalii online: https://www.materialeelectrice.ro/2-conductor-through-terminal-block-16-mm2-suitable-for-ex-e-ii-applications-lateral-marker-slots-for-din-rail-35-x-15-and-35-x-7-5-cage-clamp-16-00-mm2-light-gray-143910