www.MATERIALE ELECTRICE.ro
Consiliere specializata

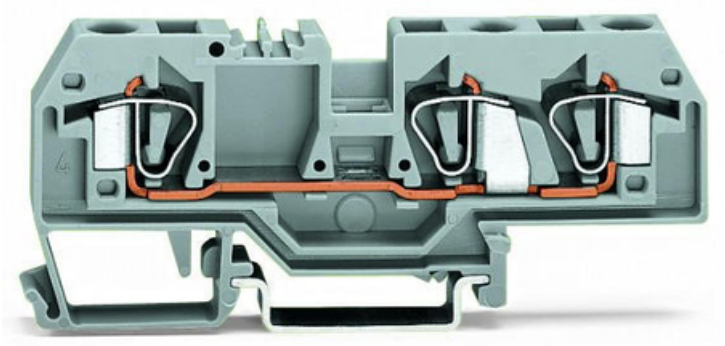

WAGO 3-CONDUCTOR THROUGH TERMINAL BLOCK; 6 MM²; CENTER MARKING; FOR DIN-RAIL 35 X 15 AND 35 X 7.5; CAGE CLAMP®; 6,00 MM²; ORANGE

Ratings per: IEC/EN 60947-7-1;
Tesiune nominala (III/3): 800; V
Tensiune nominala de supratensiune (III/3): 8; kV
Curent nominal: 41; A
Legend (ratings): (III / 3) ? Overvoltage category III / Pollution degree 3;
Tehnologie conexiune: CAGE CLAMP®;
Tip actionare: Operating tool;
Connectable conductor materials: Copper;
Solid conductor: 0,2 … 6 mm² / 24 … 10 AWG;
Fine-stranded conductor: 0,2 … 6 mm² / 24 … 10 AWG;
Strip length: 12 … 13 mm / 0.47 … 0.51 inch;
Numar total de conexiuni: 3;
Total number of potentials: 1;
Numar nivele: 1;
Wiring type: Front-entry wiring;
Latime: 8 mm / 0.315 inch;
Inaltime from upper-edge of DIN-rail: 32,5 mm / 1.28 inch;
Adancime: 93 mm / 3.661 inch;
Design: horizontal type;
Tip montaj: DIN-35 rail;
Marking level: Center marking;
Culoare: orange;
Material izolator: Polyamide 66 (PA 66);
Fire load: 0,335; MJ
Greutate: 21,4; g
Tip ambalare: BOX;

Tara de origine: DE;
GTIN: 4044918386135;
Customs tariff number: 85369010000;
Pret: 15,83 LEI (TVA inclus)

Detalii online: https://www.materialeelectrice.ro/3-conductor-through-terminal-block-6-mm2-center-marking-for-din-rail-35-x-15-and-35-x-7-5-cage-clamp-6-00-mm2-orange-143770