www.MATERIALE ELECTRICE.ro
Consiliere specializata

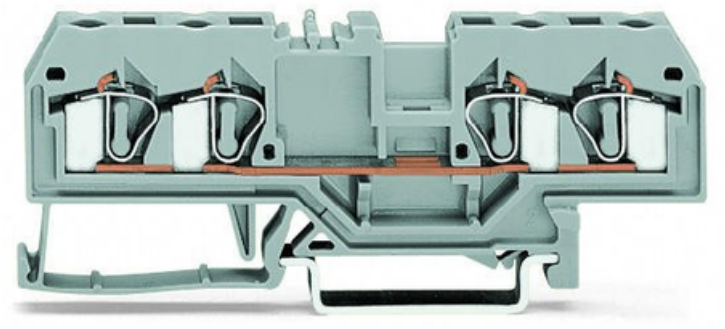

WAGO 4-CONDUCTOR THROUGH TERMINAL BLOCK; 4 MM²; CENTER MARKING; FOR DIN-RAIL 35 X 15 AND 35 X 7.5; CAGE CLAMP®; 4,00 MM²; YELLOW

Ratings per: IEC/EN 60947-7-1;
Tesiune nominala (III/3): 800; V
Tensiune nominala de supratensiune (III/3): 8; kV
Curent nominal: 26; A
Legend (ratings): (III / 3) ? Overvoltage category III / Pollution degree 3;
Tehnologie conexiune: CAGE CLAMP®;
Tip actionare: Operating tool;
Connectable conductor materials: Copper; Aluminum;
Solid conductor: 0,08 … 4 mm² / 28 … 12 AWG;
Fine-stranded conductor: 0,08 … 4 mm² / 28 … 12 AWG;
Strip length: 9 … 10 mm / 0.35 … 0.39 inch;
Numar total de conexiuni: 4;
Total number of potentials: 1;
Numar nivele: 1;
Wiring type: Front-entry wiring;
Latime: 6 mm / 0.236 inch;
Inaltime from upper-edge of DIN-rail: 29 mm / 1.142 inch;
Adancime: 86 mm / 3.386 inch;
Design: horizontal;
Tip montaj: DIN-35 rail;
Marking level: Center marking;
Culoare: yellow;
Material izolator: Polyamide 66 (PA 66);
Fire load: 0,205; MJ
Greutate: 12,7; g
Tip ambalare: BOX;

Tara de origine: DE;
GTIN: 4044918486637;
Customs tariff number: 85369010000;
Pret: 11,69 LEI (TVA inclus)

Detalii online: https://www.materialeelectrice.ro/4-conductor-through-terminal-block-4-mm2-center-marking-for-din-rail-35-x-15-and-35-x-7-5-cage-clamp-4-00-mm2-yellow-143720