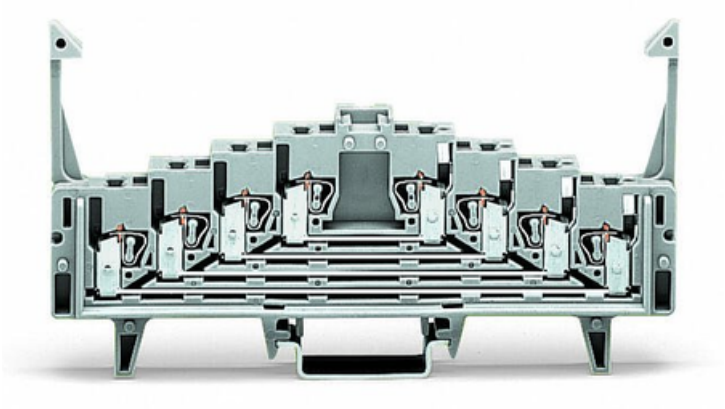

WAGO 4-LEVEL TERMINAL BLOCK FOR MATRIX PATCHING; FOR 35 X 7.5 MOUNTING RAIL; 1,50 MM²; WHITE

Tesiune nominala (III/3): 250; V
Tensiune nominala de supratensiune (III/3): 4; kV
Curent nominal: 12; A
Legend (ratings): (III / 3) ? Overvoltage category III / Pollution degree 3;
Tehnologie conexiune: CAGE CLAMP®;
Tip actionare: Operating tool;
Connectable conductor materials: Copper;
Solid conductor: 0,08 … 1,5 mm² / 28 … 16 AWG;
Fine-stranded conductor: 0,08 … 1,5 mm² / 28 … 16 AWG;
Strip length: 8 … 10 mm / 0.31 … 0.39 inch;
Numar total de conexiuni: 16;
Total number of potentials: 4;
Numar nivele: 4;
Wiring type: Front-entry wiring;
Latime: 7,62 mm / 0.3 inch;
Inaltime from upper-edge of DIN-rail: 62 mm / 2.441 inch;
Adancime: 126 mm / 4.961 inch;
Design: horizontal;
Tip montaj: DIN-35 rail;
Marking: a-b-c-d--d-c-b-a;
Marking level: Center marking;
Culoare: white;
Material izolator: Polyamide 66 (PA 66);
Fire load: 0,576; MJ
Greutate: 33,2; g
Tip ambalare: BOX;

Tara de origine: DE;
GTIN: 4045454188788;
Customs tariff number: 85369010000;
Pret: 55,83 LEI (TVA inclus)

Detalii online: https://www.materialeelectrice.ro/4-level-terminal-block-for-matrix-patching-for-35-x-7-5-mounting-rail-1-50-mm2-white-143702