www.MATERIALE ELECTRICE.ro
Consiliere specializata

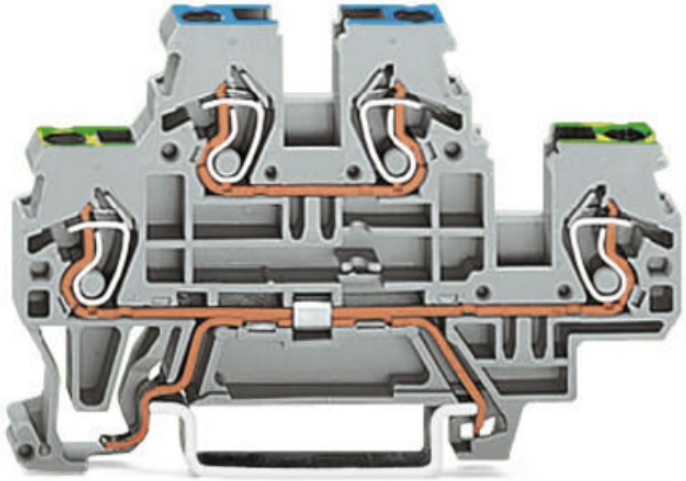

WAGO DOUBLE-DECK TERMINAL BLOCK; GROUND CONDUCTOR/THROUGH TERMINAL BLOCK; PE/L; WITHOUT MARKER CARRIER; FOR DIN-RAIL 35 X 15 AND 35 X 7.5; 2.5 MM²; CAGE CLAMP®; 2,50 MM²; GRAY

Ratings per: IEC/EN 60947-7-1;
Tesiune nominala (III/3): 500; V
Tensiune nominala de supratensiune (III/3): 6; kV
Curent nominal: 24; A
Legend (ratings): (III / 3) ? Overvoltage category III / Pollution degree 3;
Tehnologie conexiune: CAGE CLAMP®;
Tip actionare: Operating tool;
Connectable conductor materials: Copper;
Solid conductor: 0,08 … 2,5 mm² / 28 … 12 AWG;
Fine-stranded conductor: 0,08 … 4 mm² / 28 … 12 AWG;
Strip length: 6 … 7 mm / 0.24 … 0.28 inch;
Numar total de conexiuni: 4;
Total number of potentials: 2;
Numar nivele: 2;
Wiring type: Front-entry wiring;
Latime: 5 mm / 0.197 inch;
Inaltime from upper-edge of DIN-rail: 40 mm / 1.575 inch;
Adancime: 70 mm / 2.756 inch;
Design: horizontal type;
Tip montaj: DIN-35 rail;
Potential marking: PE/L;
Marking level: Side marking;
Culoare: gray;
Fire load: 0,164; MJ
Greutate: 11,3; g

Tip ambalare: BOX;
Tara de origine: DE;
GTIN: 4044918649711;
Customs tariff number: 85369010000;
Pret: 22,94 LEI (TVA inclus)

Detalii online: https://www.materialeelectrice.ro/double-deck-terminal-block-ground-conductor-through-terminal-block-pe-l-without-marker-carrier-for-din-rail-35-x-15-and-35-x-7-5-2-5-mm2-cage-clamp-2-50-mm2-gray-143143