www.MATERIALE ELECTRICE.ro
Consiliere specializata

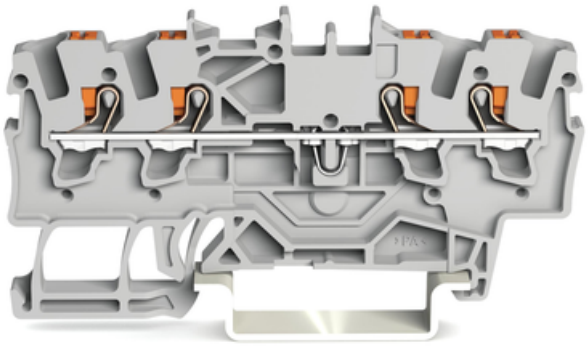

# WAGO 4-CONDUCTOR THROUGH TERMINAL BLOCK; WITH PUSH-BUTTON; 1.5 MM²; WITH TEST PORT; SIDE AND CENTER MARKING; FOR DIN-RAIL 35 X 15 AND 35 X 7.5; PUSH-IN CAGE CLAMP®; 1,00 MM²; GRAY

Ratings per: IEC/EN 60947-7-1;
Tesiune nominala (III/3): 800; V
Tensiune nominala de supratensiune (III/3): 8; kV
Curent nominal: 18; A
Curent nominal 2: 24; A
Legend (ratings): (III / 3) ? Overvoltage category III / Pollution degree 3;
Tensiune nominala UL (Use Group B): 600; V
Curent nominal UL (Use Group B): 15; A
Tensiune nominala UL (Use Group C): 600; V
Curent nominal UL (Use Group C): 15; A
Certificari: UL 1059;
Tehnologie conexiune: Push-in CAGE CLAMP®;
Tip actionare: Push-in; Push-button;
Connectable conductor materials: Copper;
Nominal cross-section: 1,5 mm²;
Solid conductor: 0,25 … 2,5 mm² / 22 … 14 AWG;
Solid conductor; push-in termination: 0,75 … 2,5 mm² / 18 … 14 AWG;
Fine-stranded conductor: 0,25 … 2,5 mm² / 22 … 14 AWG;
Fine-stranded conductor; with insulated ferrule: 0,75 … 1,5 mm² / 18 … 16 AWG;
Fine-stranded conductor; with ferrule; push-in termination: 0,75 … 1,5 mm² / 18 … 16 AWG;
Strip length: 9 … 11 mm / 0.35 … 0.43 inch;
Numar total de conexiuni: 4;
Total number of potentials: 1;
Numar nivele: 1;
Wiring type: Front-entry wiring;

Note (conductor cross-section): Depending on the conductor characteristic, a conductor with a smaller cross-section can also be inserted via push-in termination.;
Number of jumper slots: 2;
Latime: 4,2 mm / 0.165 inch;
Inaltime from upper-edge of DIN-rail: 32,9 mm / 1.295 inch;
Adancime: 69,9 mm / 2.752 inch;
Design: horizontal type;
Tip montaj: DIN-35 rail;
Marking level: Center/side marking;
Culoare: gray;
Material izolator: Polyamide 66 (PA 66);
Greutate: 6,1; g
Tip ambalare: BOX;
Tara de origine: DE;
GTIN: 4055143696852;
Customs tariff number: 85369010000;
Pret: 6,19 LEI (TVA inclus)

Detalii online: https://www.materialeelectrice.ro/4-conductor-through-terminal-block-with-push-button-1-5-mm2-with-test-port-side-and-center-marking-for-din-rail-35-x-15-and-35-x-7-5-push-in-cage-clamp-1-00-mm2-gray-142467