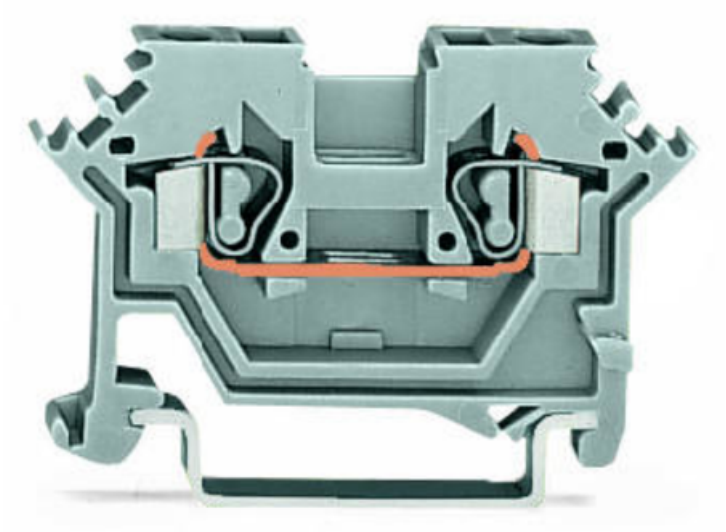

WAGO 2-CONDUCTOR THROUGH TERMINAL BLOCK; 2.5 MM²; SUITABLE FOR EX I APPLICATIONS; LATERAL MARKER SLOTS; FOR DIN-RAIL 35 X 15 AND 35 X 7.5; CAGE CLAMP®; 2,50 MM²; BLUE

Ratings per: IEC/EN 60947-7-1;
Tesiune nominala (III/3): 800; V
Tensiune nominala de supratensiune (III/3): 8; kV
Curent nominal: 24; A
Legend (ratings): (III / 3) ? Overvoltage category III / Pollution degree 3;
Tehnologie conexiune: CAGE CLAMP®;
Tip actionare: Operating tool;
Connectable conductor materials: Copper; Aluminum;
Solid conductor: 0,08 … 2,5 mm² / 28 … 12 AWG;
Fine-stranded conductor: 0,08 … 2,5 mm² / 28 … 12 AWG;
Strip length: 8 … 9 mm / 0.31 … 0.35 inch;
Numar total de conexiuni: 2;
Total number of potentials: 1;
Numar nivele: 1;
Wiring type: Front-entry wiring;
Note (conductor cross-section): 12 AWG: THHN, THWN;
Latime: 5 mm / 0.197 inch;
Inaltime from upper-edge of DIN-rail: 28 mm / 1.102 inch;
Adancime: 50 mm / 1.969 inch;
Design: horizontal type;
Tip montaj: DIN-35 rail;
Marking level: Side marking;
Culoare: blue;
Material izolator: Polyamide 66 (PA 66);
Fire load: 0,09; MJ

Greutate: 4,7; g
Tip ambalare: BOX;
Tara de origine: DE;
GTIN: 4044918465328;
Customs tariff number: 85369010000;
Pret: 6,37 LEI (TVA inclus)

Detalii online: https://www.materialeelectrice.ro/2-conductor-through-terminal-block-2-5-mm2-suitable-for-ex-i-applications-lateral-marker-slots-for-din-rail-35-x-15-and-35-x-7-5-cage-clamp-2-50-mm2-blue-142446