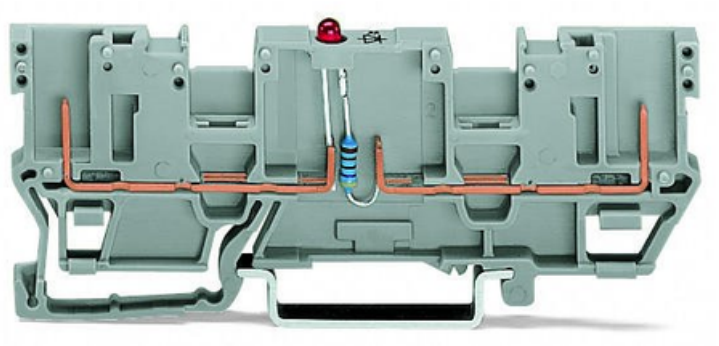

WAGO 2-PIN COMPONENT CARRIER BLOCK; WITH 2 JUMPER POSITIONS; LED (RED); 24 VDC; FOR DIN-RAIL 35 X 15 AND 35 X 7.5; GRAY

Voltage type 1: DC;
Tesiune nominala: 24; V
Curent nominal: 0,025; A
Total number of potentials: 1;
Numar nivele: 1;
Wiring type: Front-entry wiring;
Latime: 5 mm / 0.197 inch;
Inaltime from upper-edge of DIN-rail: 28.5 mm / 1.122 inch;
Adancime: 87.5 mm / 3.445 inch;
Design: horizontal;
Tip montaj: DIN-35 rail;
Marking level: Center marking;
Culoare: gray;
Material izolator: Polyamide 66 (PA 66);
Fire load: 0,159; MJ
Greutate: 7,6; g
Product Group: 18 (X-COM-System);
Tip ambalare: BOX;
Tara de origine: DE;
GTIN: 4050821418405;
Customs tariff number: 85369010000;
Pret: 27,21 LEI (TVA inclus)

Detalii online: https://www.materialeelectrice.ro/2-pin-component-carrier-block-with-2-jumper-positions-led-red-24-vdc-for-din-rail-35-x-15-and-35-x-7-5-gray-141970