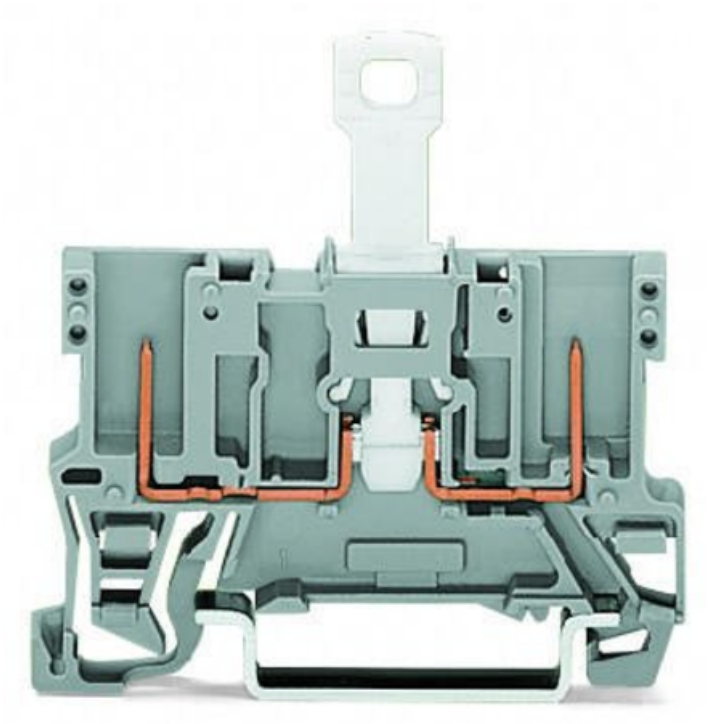

WAGO 2-PIN DISCONNECT CARRIER TERMINAL BLOCK; FOR DIN-RAIL 35 X 15 AND 35 X 7.5; 4,00 MM²; GRAY

Tesiune nominala (III/3): 400; V
Tensiune nominala de supratensiune (III/3): 6; kV
Curent nominal: 16; A
Legend (ratings): (III / 3) ? Overvoltage category III / Pollution degree 3;
Total number of potentials: 1;
Numar nivele: 1;
Wiring type: Front-entry wiring;
Latime: 5 mm / 0.197 inch;
Inaltime from upper-edge of DIN-rail: 28.5 mm / 1.122 inch;
Adancime: 52.5 mm / 2.067 inch;
Design: horizontal;
Tip montaj: DIN-35 rail;
Marking level: Center marking;
Culoare: gray;
Material izolator: Polyamide 66 (PA 66);
Fire load: 0,112; MJ
Greutate: 5,1; g
Product Group: 18 (X-COM-System);
Tip ambalare: BOX;
Tara de origine: DE;
GTIN: 4045454619404;
Customs tariff number: 85365080900;
Pret: 10,94 LEI (TVA inclus)

Detalii online: https://www.materialeelectrice.ro/2-pin-disconnect-carrier-terminal-block-for-din-rail-35-x-15-and-35-x-7-5-4-00-mm2-gray-141961