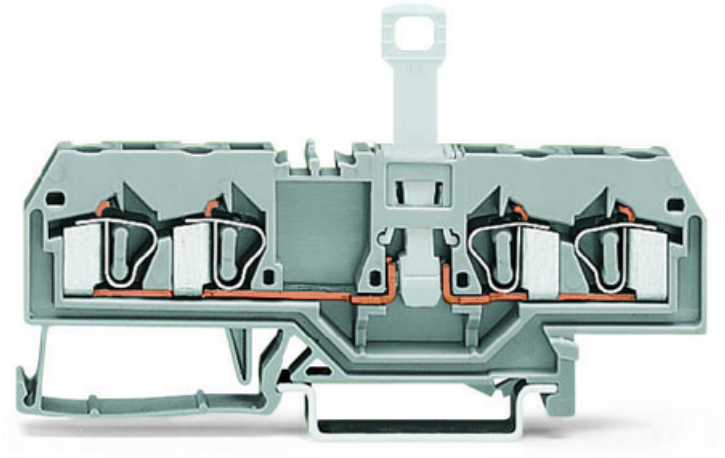

WAGO 4-CONDUCTOR DISCONNECT TERMINAL BLOCK; FOR DIN-RAIL 35 X 15 AND 35 X 7.5; 4 MM²; CAGE CLAMP®; 4,00 MM²; GRAY

Tesiune nominala (III/3): 400; V
Tensiune nominala de supratensiune (III/3): 6; kV
Curent nominal: 10; A
Legend (ratings): (III / 3) ? Overvoltage category III / Pollution degree 3;
Tehnologie conexiune: CAGE CLAMP®;
Tip actionare: Operating tool;
Connectable conductor materials: Copper; Aluminum;
Solid conductor: 0,08 … 4 mm² / 28 … 12 AWG;
Fine-stranded conductor: 0,08 … 4 mm² / 28 … 12 AWG;
Strip length: 9 … 10 mm / 0.35 … 0.39 inch;
Numar total de conexiuni: 4;
Total number of potentials: 2;
Numar nivele: 1;
Wiring type: Front-entry wiring;
Latime: 6 mm / 0.236 inch;
Inaltime from upper-edge of DIN-rail: 53,5 mm / 2.106 inch;
Adancime: 86 mm / 3.386 inch;
Design: horizontal;
Tip montaj: DIN-35 rail;
Marking level: Center marking;
Culoare: gray;
Material izolator: Polyamide 66 (PA 66);
Fire load: 0,218; MJ
Greutate: 13,3; g
Product Group: 1 (Rail Mounted Terminal Blocks);
Tip ambalare: BOX;

Tara de origine: DE;
GTIN: 4044918837781;
Customs tariff number: 85365080900;
Pret: 19,48 LEI (TVA inclus)

Detalii online: https://www.materialeelectrice.ro/4-conductor-disconnect-terminal-block-for-din-rail-35-x-15-and-35-x-7-5-4-mm2-cage-clamp-4-00-mm2-gray-141376