www.MATERIALE ELECTRICE.ro
Consiliere specializata

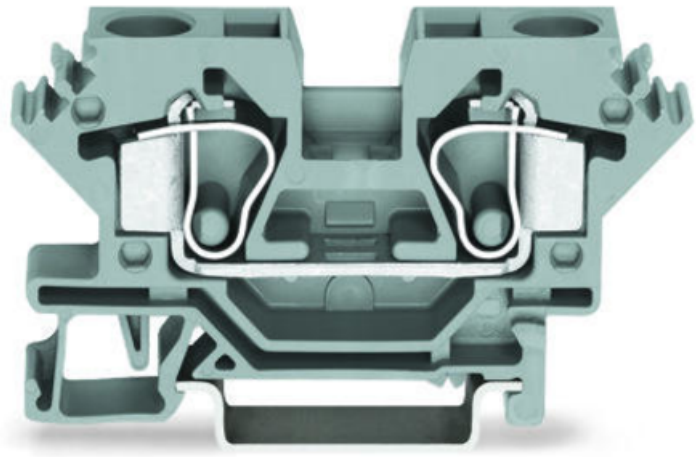

WAGO 2-CONDUCTOR THROUGH TERMINAL BLOCK; 10 MM²; SUITABLE FOR EX E II APPLICATIONS; LATERAL MARKER SLOTS; FOR DIN-RAIL 35 X 15 AND 35 X 7.5; CAGE CLAMP®; 10,00 MM²; LIGHT GRAY

Ratings per: IEC/EN 60947-7-1;
Tensiune nominala EN (Ex e II): 550; V
Curent nominal (Ex e II): 53; A
Tehnologie conexiune: CAGE CLAMP®;
Tip actionare: Operating tool;
Connectable conductor materials: Copper;
Solid conductor: 0,2 … 10 mm² / 24 … 8 AWG;
Fine-stranded conductor: 0,2 … 10 mm² / 24 … 8 AWG;
Strip length: 12 … 13 mm / 0.47 … 0.51 inch;
Numar total de conexiuni: 2;
Total number of potentials: 1;
Numar nivele: 1;
Wiring type: Front-entry wiring;
Latime: 10 mm / 0.394 inch;
Inaltime from upper-edge of DIN-rail: 33,5 mm / 1.319 inch;
Adancime: 69 mm / 2.717 inch;
Design: horizontal;
Tip montaj: DIN-35 rail;
Marking level: Side marking;
Culoare: light gray;
Material izolator: Polyamide 66 (PA 66);
Fire load: 0,261; MJ
Greutate: 18,7; g
Tip ambalare: BOX;
Tara de origine: DE;

GTIN: 4044918486484;
Customs tariff number: 85369010000;
Pret: 15,09 LEI (TVA inclus)

Detalii online: https://www.materialeelectrice.ro/2-conductor-through-terminal-block-10-mm2-suitable-for-ex-e-ii-applications-lateral-marker-slots-for-din-rail-35-x-15-and-35-x-7-5-cage-clamp-10-00-mm2-light-gray-140220