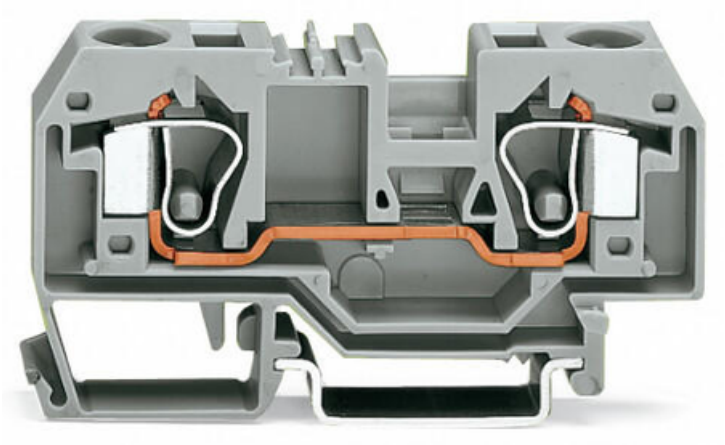

WAGO 2-CONDUCTOR THROUGH TERMINAL BLOCK; 10 MM²; CENTER MARKING; FOR DIN-RAIL 35 X 15 AND 35 X 7.5; CAGE CLAMP®; 10,00 MM²; GRAY

Ratings per: IEC/EN 60947-7-1;
Tesiune nominala (III/3): 800; V
Tensiune nominala de supratensiune (III/3): 8; kV
Curent nominal: 57; A
Legend (ratings): (III / 3) ? Overvoltage category III / Pollution degree 3;
Tehnologie conexiune: CAGE CLAMP®;
Tip actionare: Operating tool;
Connectable conductor materials: Copper;
Solid conductor: 0,2 … 10 mm² / 24 … 8 AWG;
Fine-stranded conductor: 0,2 … 10 mm² / 24 … 8 AWG;
Strip length: 12 … 13 mm / 0.47 … 0.51 inch;
Numar total de conexiuni: 2;
Total number of potentials: 1;
Numar nivele: 1;
Wiring type: Front-entry wiring;
Latime: 10 mm / 0.394 inch;
Inaltime from upper-edge of DIN-rail: 35 mm / 1.378 inch;
Adancime: 78 mm / 3.071 inch;
Design: horizontal type;
Tip montaj: DIN-35 rail;
Marking level: Center marking;
Culoare: gray;
Material izolator: Polyamide 66 (PA 66);
Fire load: 0,348; MJ
Greutate: 23,1; g
Product Group: 1 (Rail Mounted Terminal Blocks);

Tip ambalare: BOX;
Tara de origine: DE;
GTIN: 4044918305730;
Customs tariff number: 85369010000;
Pret: 14,66 LEI (TVA inclus)

Detalii online: https://www.materialeelectrice.ro/2-conductor-through-terminal-block-10-mm2-center-marking-for-din-rail-35-x-15-and-35-x-7-5-cage-clamp-10-00-mm2-gray-140198