www.MATERIALE ELECTRICE.ro
Consiliere specializata

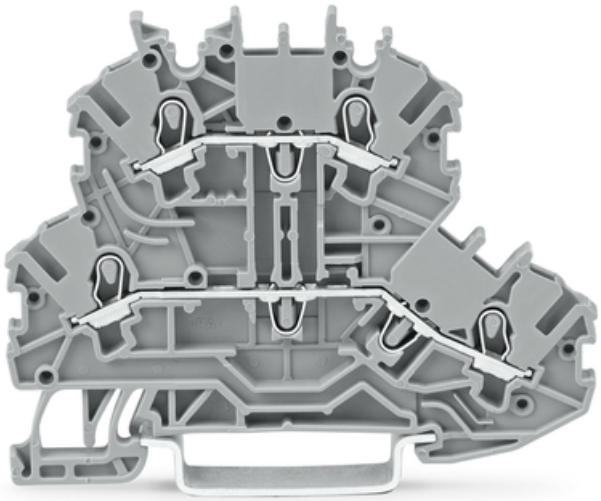

WAGO DOUBLE-DECK TERMINAL BLOCK; THROUGH/THROUGH TERMINAL BLOCK; L/L; WITHOUT MARKER CARRIER; FOR DIN-RAIL 35 X 15 AND 35 X 7.5; 1 MM²; PUSH-IN CAGE CLAMP®; 1,00 MM²; GRAY

Ratings per: IEC/EN 60947-7-1;
Tesiune nominala (III/3): 500; V
Tensiune nominala de supratensiune (III/3): 6; kV
Curent nominal: 13,5; A
Curent nominal 2: 16; A
Legend (ratings): (III / 3) ? Overvoltage category III / Pollution degree 3;
Tensiune nominala UL (Use Group B): 300; V
Curent nominal UL (Use Group B): 15; A
Tensiune nominala UL (Use Group C): 300; V
Curent nominal UL (Use Group C): 15; A
Certificari: UL 1059;
Tensiune nominala CSA (Use Group B): 600; V
Curent nominal CSA (Use Group B): 10; A
Tensiune nominala CSA (Use Group C): 600; V
Curent nominal CSA (Use Group C): 10; A
Tehnologie conexiune: Push-in CAGE CLAMP®;
Number of connection points (connection type): 2;
Tip actionare: Push-in; Open Tool Slot;
Connectable conductor materials: Copper;
Nominal cross-section: 1 mm²;
Solid conductor: 0,14 … 1,5 mm² / 24 … 16 AWG;
Solid conductor; push-in termination: 0,5 … 1,5 mm² / 20 … 16 AWG;
Fine-stranded conductor: 0,14 … 1,5 mm² / 24 … 16 AWG;
Fine-stranded conductor; with insulated ferrule: 0,5 … 0,75 mm² / 20 … 18 AWG;
Fine-stranded conductor; with ferrule; push-in termination: 0,5 … 0,75 mm² / 20 … 18 AWG;

Strip length: 9 … 11 mm / 0.35 … 0.43 inch;
Number of connection points: 2;
Numar total de conexiuni: 4;
Total number of potentials: 2;
Numar nivele: 2;
Wiring type: Front-entry wiring;
Note (conductor cross-section): Depending on the conductor characteristic, a conductor with a smaller cross section can also be inserted via push-in termination.;
Latime: 3,5 mm / 0.138 inch;
Inaltime from upper-edge of DIN-rail: 51,7 mm / 2.035 inch;
Adancime: 69,7 mm / 2.744 inch;
Design: horizontal;
Tip montaj: DIN-35 rail;
Potential marking: L/L;
Marking level: Center/side marking;
Culoare: gray;
Material izolator: Polyamide 66 (PA 66);
Fire load: 0,152; MJ
Greutate: 7,3; g
Tip ambalare: BOX;
Tara de origine: CN;
GTIN: 4050821891703;
Customs tariff number: 85369010000;
Pret: 11,13 LEI (TVA inclus)

Detalii online: https://www.materialeelectrice.ro/double-deck-terminal-block-through-through-terminal-block-l-l-without-marker-carrier-for-din-rail-35-x-15-and-35-x-7-5-1-mm2-push-in-cage-clamp-1-00-mm2-gray-140159