www.MATERIALE ELECTRICE.ro
Consiliere specializata

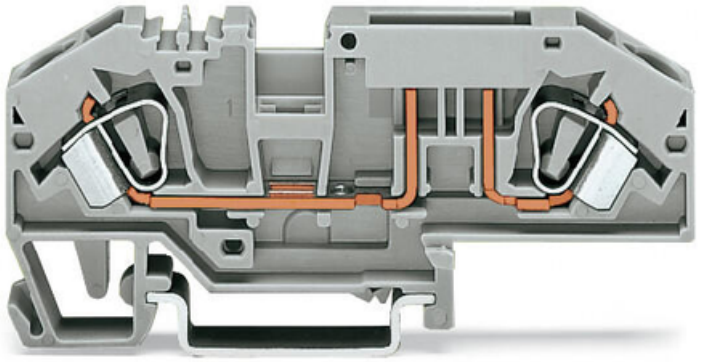

WAGO 2-CONDUCTOR FUSE TERMINAL BLOCK; FOR AUTOMOTIVE BLADE-STYLE FUSES; WITH TEST OPTION; WITHOUT BLOWN FUSE INDICATION; 6 MM²; CAGE CLAMP®; 6,00 MM²; GRAY

Ratings per: IEC/EN 60947-7-3;
Tesiune nominala (III/3): 400; V
Tensiune nominala de supratensiune (III/3): 6; kV
Curent nominal: 25; A
Curent nominal 2: 30; A
Legend (ratings): (III / 3) ? Overvoltage category III / Pollution degree 3;
Tehnologie conexiune: CAGE CLAMP®;
Tip actionare: Operating tool;
Connectable conductor materials: Copper;
Solid conductor: 0,2 … 6 mm² / 24 … 10 AWG;
Fine-stranded conductor: 0,2 … 6 mm² / 24 … 10 AWG;
Strip length: 12 … 13 mm / 0.47 … 0.51 inch;
Numar total de conexiuni: 2;
Total number of potentials: 2;
Numar nivele: 1;
Wiring type: Front-entry wiring;
Latime: 8 mm / 0.315 inch;
Inaltime from upper-edge of DIN-rail: 33,5 mm / 1.319 inch;
Adancime: 85 mm / 3.346 inch;
Design: angled;
Tip montaj: DIN-35 rail;
Marking level: Center marking;
Culoare: gray;
Material izolator: Polyamide 66 (PA 66);
Fire load: 0,293; MJ

Greutate: 17,3; g
Product Group: 1 (Rail Mounted Terminal Blocks);
Tip ambalare: BOX;
Tara de origine: CN;
GTIN: 4050821234517;
Customs tariff number: 85369095990;
Pret: 25,67 LEI (TVA inclus)

Detalii online: https://www.materialeelectrice.ro/2-conductor-fuse-terminal-block-for-automotive-blade-style-fuses-with-test-option-without-blown-fuse-indication-6-mm2-cage-clamp-6-00-mm2-gray-139969