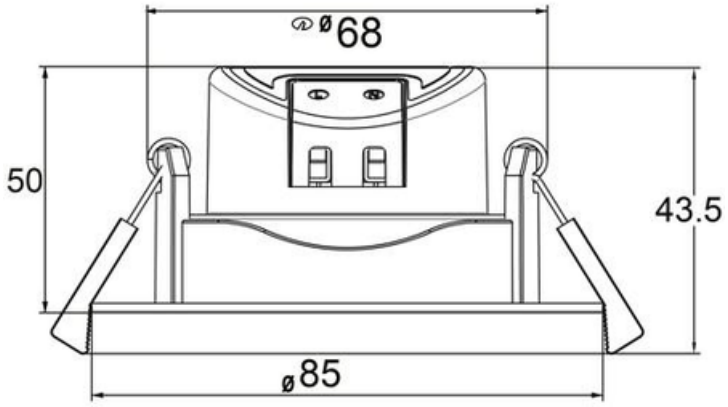

BRAYTRON SMD 5W SPOTLED-G2 6500K-WHITE

TypeLED Type: SPOTLED-G2SMD
Culoare, putere: White/Silver5W
Flux luminos: 380lm
CRI: >80
Power Factor: >0.5
Beam angle: 38
Tensiune: 220V-240VAC
Material: PC
Difuzor: PC
Driver: inclus
Umiditate ambientala.Cutout: %5-%7068mm
Pret: 25,64 LEI (TVA inclus)

Detalii online: https://www.materialeelectrice.ro/smd-5w-spotled-g2-6500k-white-105121