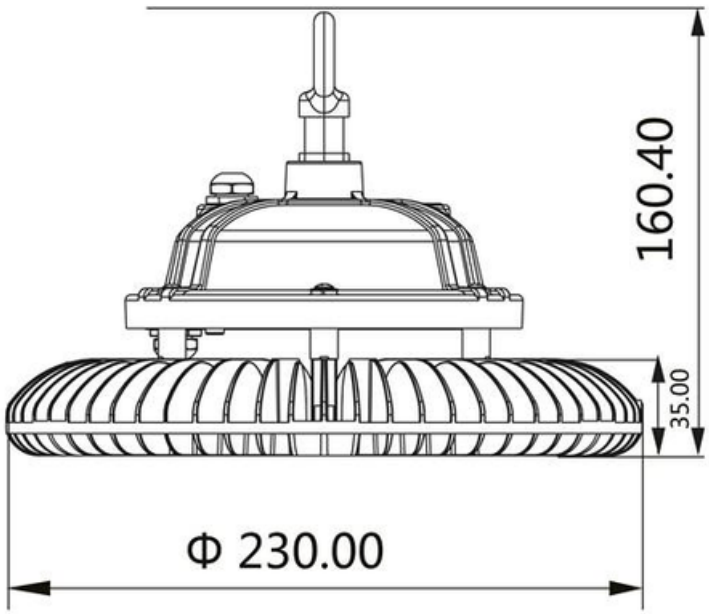

BRAYTRON CORP DE ILUMINAT HIBAY SP 100W 6000K

TypeLED Type: HIBAY-SPSMD
Culoare, putere: Grey100W
Flux luminos: 10000lm
CRI: >80
Power Factor: >0.9
Beam angle: 90
Tensiune: 220V-240VAC
Material: Aluminium
Difuzor: PC
Driver: inclus
Umiditate ambientala.: %5-%95
Pret: 410,52 LEI (TVA inclus)

Detalii online: https://www.materialeelectrice.ro/corp-de-iluminat-hibay-sp-100w-6000k-105036