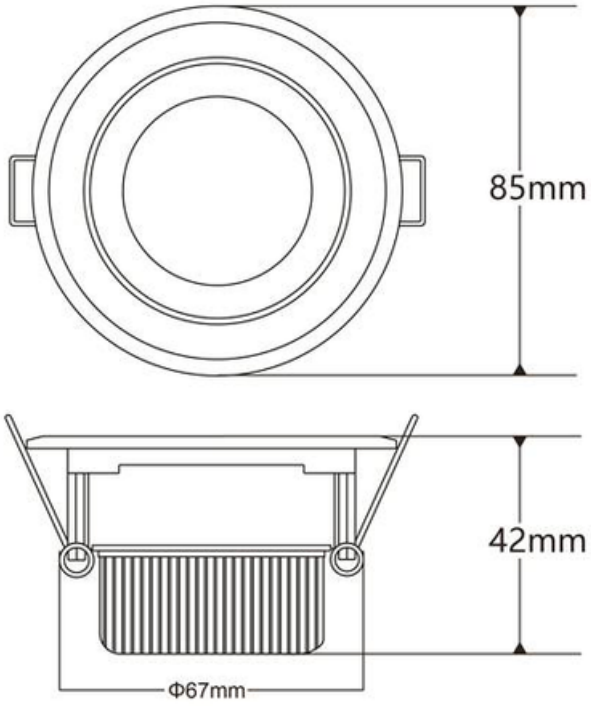

BRAYTRON COB-S 5W SPOT TIP DOWNLIGHT 6500K

TypeLED Type: COB-SCOB
Culoare, putere: White5W
Flux luminos: 350lm
CRI: >70
Power Factor: >0.5
Beam angle: 60
Tensiune: 220V-240VAC
Material: Aluminium
Difuzor: Sticla
Driver: inclus
Umiditate ambientala.: %5-%70
Pret: 17,92 LEI (TVA inclus)

Detalii online: https://www.materialeelectrice.ro/cob-s-5w-spot-tip-downlight-6500k-105010